AMO - Advanced Modeling and Optimization, Volume 12, Number 3, 2010

Time optimal control problem of the wave equation

A. R. Nazemi[1], **S. Effati**[2]

[1]Department of Mathematics, School of Mathematical Sciences, Shahrood University of Technology, P.O. Box 3619995161-316, Tel-Fax No:0098273-3392012, Shahrood, Iran.
[2] Department of Mathematical Sciences, Ferdowsi University of Mashhad, Mashhad, Iran.

ABSTRACT To obtain a control function which puts the wave equation in an unknown minimum time into a stationary regime is considered is considered. Using an embedding method, the problem of finding the time optimal control is reduced to one consisting of minimizing a linear form over a set of positive measures. The resulting problem can be approximated by a finite dimensional linear programming (LP) problem. The nearly optimal control is constructed from the solution of the final LP problem. To find the lower bound of the optimal time a search algorithm is proposed. Some examples demonstrate the effectiveness of the method.

AMS Mathematics Subject Classification (2000): 93B05, 90C05, 49J20, 65D05.
Keywords : Wave equation, functional space, measure space, time optimal control, linear programming.

1. Introduction

Let us consider the following problem:

$$P_{tt}(x,t) = P_{xx}(x,t) + u(t)b(x), \quad (x,t) \in \omega \times [0,T], \tag{1}$$

$$P(x,0) = Q_0(x), \qquad x \in \omega, \tag{2}$$

$$P_t(x,0) = Q_1(x), \qquad x \in \omega, \tag{3}$$

$$P(x,t) = 0, \qquad (x,t) \in \partial\omega \times [0,T], \tag{4}$$

where $\omega = (0, L_1)$ is a bounded open subset of Eucleadian space $I\!R$ with boundary $\partial\omega$, , T is an unknown positive number, $u(\cdot)$ is a control in the space $L_2([0,T])$, c is a constant, and

[1](Corresponding author) email:nazemi20042003@yahoo.com
[2]email:effati911@yahoo.com

the functions $b(x)$, $Q_0(x)$ and $Q_1(x)$ are given in $L_2(\omega)$.

Definition 1.1 *The control function $u(\cdot)$ is called admissible if it is a Lebesgue measurable function and $u(t) \in [-K, K]$, almost everywhere for $t \in [0, T]$ and some suitable $K > 0$. Furthermore this control puts the system (1)-(4) in final minimum time T into a stationary regime, i.e.*

$$P(x, T) = F(x), \quad x \in \omega, \tag{5}$$

$$P_t(x, T) = G(x), \quad x \in \omega, \tag{6}$$

where the known functions $F(\cdot) \in L_2(\omega)$ and $G(\cdot) \in L_2(\omega)$ are called the desired final state and the desired final velocity , respectively. We denote the set of all admissible controls by U_{ad} and assume it is nonempty.

Optimal control of distributed parameter systems governed by a system of hyperbolic equations is of special importance for the active control of structural systems for which the equations of motion are generally expressed by hyperbolic differential equations. The field of structural control has been an active research area for a number of years. However, most of the studies in this area considered specific structures such as wings [21], beams [17] and plates [3]. Even though these studies provided solutions for many particular cases, the theoretical foundations of the subject aimed specifically at problems arising in structural mechanics have not received much attention. Theoretical studies such as the ones in [2],[9] considered the optimal control problems in abstract settings leaving a gap between the theory and applications. In particular, optimal control studies relating the theory directly to the solution method have been scarce. However, one such application is given in [4] for a structural vibration problem governed by a single hyperbolic equation. Another application is given herein for a vibration problem governed by a system of hyperbolic equations. The developed maximum principle [5] was used to construct explicit solutions for an optimal control problem involving a distributed parameter structure governed by a system of hyperbolic differential equations.

Motivated by the above discussions, in this paper, we present the optimization technique for solving problems (1)-(6) based on the measure theory method [19]. We may encounter some aspects of the proposed method in comparison with other numerical methods for solving the time optimal control of the wave equation. The method is not iterative, it is self-starting, and it is not restricted to differentiable cost functions. Because of these features, this approach has been successfully used to solve a variety of control, optimization and shape design problems [6,7,8,12,13,14,15,16].

2. Moment problem

The problem (1)-(6) can be reduced to a problem of moments. We consider the solution of the problem (1)-(4) in the sense of [1]:

$$\begin{bmatrix} P(x,t) \\ \\ P_t(x,t) \end{bmatrix} = \tag{7}$$

$$\begin{bmatrix} \sum_{n=1}^{\infty}[Q_{0n}\cos(\lambda_n t) + \frac{1}{\lambda_n}Q_{1n}\sin(\lambda_n t) + \frac{b_n}{\lambda_n}\int_0^t \sin(\lambda_n(t-\tau))u(\tau)d\tau]e_n(x) \\ \\ \sum_{n=1}^{\infty}[-\lambda_n Q_{0n}\sin(\lambda_n t) + Q_{1n}\cos(\lambda_n t) + b_n\int_0^t \cos(\lambda_n(t-\tau))u(\tau)d\tau]e_n(x) \end{bmatrix},$$

where the expansion of the functions $b(\cdot)$, $Q_0(\cdot)$, $Q_1(\cdot)$, $F(\cdot)$ and $G(\cdot)$, in terms of eigenfunctions are

$$\begin{cases} b(x) = \sum_{n=1}^{\infty} b_n e_n(x), \\ Q_0(x) = \sum_{n=1}^{\infty} Q_{0n} e_n(x), \\ Q_1(x) = \sum_{n=1}^{\infty} Q_{1n} e_n(x), \\ F(x) = \sum_{n=1}^{\infty} F_n e_n(x), \\ G(x) = \sum_{n=1}^{\infty} G_n e_n(x). \end{cases}$$

From (5)-(7) and the above Fourier series we have

$$\begin{cases} Q_{0n}\cos(\lambda_n T) + \frac{1}{\lambda_n}Q_{1n}\sin(\lambda_n T) + \frac{b_n}{\lambda_n}\int_0^T \sin(\lambda_n(T-t))u(t)dt = F_n, \\ \\ -\lambda_n Q_{0n}\sin(\lambda_n T) + Q_{1n}\cos(\lambda_n T) + b_n\int_0^T \cos(\lambda_n(T-t))u(t)dt = G_n, \end{cases}$$

for $n = 1, 2, \cdots$. Thus, to solve the problem (1)-(6) is equivalent to solve the problem of the following moment problems

$$\begin{cases} \int_0^T \sin(\lambda_n t)u(t)dt = \frac{1}{b_n}[G_n\sin(\lambda_n T) - \lambda_n F_n\cos(\lambda_n T) + \lambda_n Q_{0n}], \\ \\ \int_0^T \cos(\lambda_n t)u(t)dt = \frac{1}{b_n}[G_n\cos(\lambda_n T) + \lambda_n F_n\sin(\lambda_n T) - Q_{1n}]. \end{cases}$$

For simplicity, denote

$$\begin{cases} c_n = \frac{1}{b_n}[G_n\sin(\lambda_n T) - \lambda_n F_n\cos(\lambda_n T) + \lambda_n Q_{0n}], \\ \\ d_n = \frac{1}{b_n}[G_n\cos(\lambda_n T) + \lambda_n F_n\sin(\lambda_n T) - Q_{1n}]. \end{cases}$$

and put

$$a_n = \begin{cases} c_k, & \text{if } n = 2k-1, \\ d_k, & \text{if } n = 2k, \end{cases} \qquad \varphi_n(t, u(t)) = \begin{cases} \sin(\lambda_k t)u(t), & \text{if } n = 2k-1, \\ \cos(\lambda_k t)u(t), & \text{if } n = 2k. \end{cases}$$

Hence minimum time control problem is reduced to finding a pair $(u(\cdot), T)$ satisfying:

$$\text{minimize} \qquad T = \int_0^T dt \tag{8}$$

subject to

$$\int_0^T \varphi_n(t, u(t))dt = a_n, \qquad n = 1, 2, \cdots . \tag{9}$$

In the next section, we proceed to enlarge the set U_{ad}.

3. Metamorphosis

In general, it may be difficult to characterize the optimal trajectory in U_{ad}; necessary conditions are not always helpful because the information that they give may be impossible to interpret. It appears that these situations may become more favorable if the set U_{ad} could somehow be made larger. In the following we use a transformation to enlarge the set U_{ad}.

Let $\Omega = [0, T] \times [-K, K]$ and $C(\Omega)$ be the space of all real-valued continuous functions on Ω. For each admissible control $u(\cdot) \in U_{ad}$, we correspond a linear continuous functional Λ as follows:

$$\Lambda : \mathcal{F} \longrightarrow \int_0^T \mathcal{F}(t, u(t))dt, \quad \forall \mathcal{F} \in C(\Omega). \tag{10}$$

Some aspects of this mapping are useful; it is well defined and positive.

Proposition 3.1 *Transformation $u \to \Lambda$ of an admissible control in U_{ad} into the linear mapping Λ defined in (10) is an injection.*

Proof. Similar to Proposition 4.1 in [7]. □

Thus, solving (8)-(9) can be equivalently reformulated as find Λ in functional space $C^*(\Omega)$, (C^* is the dual space), such that

$$\text{minimize } \Lambda(1), \tag{11}$$

subject to

$$\Lambda(\varphi_n) = a_n, \qquad n = 1, 2, \cdots . \tag{12}$$

By Riesz representation theorem [20], there exists a unique positive Radon representing the measure μ on Ω such that

$$\Lambda(F) = \int_\Omega F d\mu \equiv \mu(F), \qquad \forall F \in C(\Omega). \tag{13}$$

These measures μ are required to have certain properties which are abstracted from the definition of admissible controls. First, from (13)

$$|\mu(F)| \leq T \sup_{\Omega} |F(t, u(t)|,$$

hence

$$\mu(1) \leq T.$$

From (12) and (13), we see that the measures μ satisfy

$$\mu(\varphi_n) = a_n, \qquad n = 1, 2, \cdots .$$

Next, suppose that $\theta \in C(\Omega)$ does not depend on u, i.e.

$$\theta(t, u_1) = \theta(t, u_2),$$

for all $t \in [0, T]$ and $u_1, u_2 \in [-K, K]$, where $u_1 \neq u_2$. Then the measures μ must satisfy

$$\int_{\Omega} \theta d\mu = \int_0^T \theta(t, u) dt = \alpha_\theta,$$

where u is an arbitrary number in the set $[-K, K]$, and α_θ is the Lebesgue integral of $\theta(\cdot, u)$ over $[0, T]$.

Let $M^+(\Omega)$ be the set of all positive Radon measures on Ω. We topologize the space $M^+(\Omega)$ by the weak*-topology and define the set Q as a subset of $M^+(\Omega)$ as follows

$$Q = S_1 \cap S_2 \cap S_3,$$

where

$$\begin{aligned} S_1 &= \{\mu \in M^+(\Omega) : \mu(1) \leq T\}, \\ S_2 &= \{\mu \in M^+(\Omega) : \mu(\varphi_n) = a_n, n = 1, 2, \ldots\}, \\ S_3 &= \{\mu \in M^+(\Omega) : \mu(\theta) = \alpha_\theta, \theta \in C(\Omega) \text{ independent of } u\}. \end{aligned}$$

So one may change the optimization problem (11)-(12) in functional space to the following optimization problem in measure space:

$$\text{minimize } I(\mu) = \int_{\Omega} d\mu \equiv \mu(1) \tag{14}$$

subject to

$$\mu \in Q. \tag{15}$$

Theorem 3.2 *The set Q is compact in $M^+(\Omega)$.*

Proof. The set S_1 is compact and the set S_2 can be written as

$$S_2 = \bigcap_{n=1}^{\infty} \{\mu \in \mathcal{M}^+(\Omega) : \mu(\varphi_n) = a_n\} = \bigcap_{n=1}^{\infty} M_n,$$

where each $M_n = \{\mu \in \mathcal{M}^+(\Omega) : \mu(\varphi_n) = a_n\}$ is closed, because it is the inverse image of a closed set on the real line, the set $\{a_n\}$, under a continuous map. By a similar argument, it is easy to show that S_3 is closed. Thus Q is a closed subset of the compact set S_1, and then Q is compact. □

Proposition 3.3 *The measure-theoretical control problem (14)-(15) attains its minimum at a measure $\mu^* \in Q$.*

Proof. The proof is clear; since μ is a continuous linear functional and Q is a compact set. □

4. Approximation of the optimal control by a piecewise-constant control

Let Q_1 be the space of all Radon measures in Ω corresponding to a piecewise constant admissible control $u(\cdot)$. By a theorem of Ghoulia-Houri [11], Q_1 is dense in $S_1 \cap S_2$. A basis of closed neighborhoods in the weak*-topology is given by sets of the form:

$$\{\mu : \ |\mu(H_n)| \leq \epsilon, n = 1, 2, ..., 2k+1\},$$

where where k is an integer, $\epsilon \geq 0$ and $H_n \in C(\Omega)$, $n = 1, 2, ..., 2k+1$. It is therefor possible that to find a measure μ_u, corresponding to a piecewise control u, in any weak*-neighborhood of μ^* (the minimizing measure of Proposition 3.3). In particular, if we choose

$$H_1 = 1, H_2 = \varphi_1, H_3 = \varphi_2, ..., H_{2k+1} = \varphi_{2k};$$

a piecewise constant control $u_k(\cdot)$ can be found such that

$$|\int_0^T dt - \mu^*(1)| \leq \epsilon,$$
$$|\int_0^T \varphi_n(t, u_k)dt - a_n| \leq \epsilon, \ n = 1, 2, ..., 2k.$$

Therefor, by using the piecewise constant control $u_k(\cdot)$, we can get within ϵ of the minimum value $\mu^*(1)$.

Let $P_k(x, T)$ and $P_{t_k}(x, T)$ be the final sate and its derivative attained by the control $u_k(\cdot)$. We can show that if ϵ is chosen small enough, and k large enough, then $||P_k(x, T) - F(x)||_2^2$ and $||P_{t_k}(x, T) - G(x)||_2^2$ can be made as small as desired.

Proposition 4.1 *Given $\delta \geq 0$, we may choose $\epsilon > 0$ and $k = k(\epsilon, \delta)$ such that*

$$\int_\omega (P_k(x,T) - F(x))^2 \, dx \leq \delta,$$
$$\int_\omega (P_{t_k}(x,T) - G(x))^2 \, dx \leq \delta.$$

Proof. Similar to Proposition VIII.2 in [19]. □

In the next sections, we shall establish a method for estimating numerically trajectories which approximate the action of the optimal measures.

5. Approximation to the optimal measure

In this section, we obtain an approximation to the optimal measure μ^* satisfying in (14)-(15).

It is clear that the measure theoretical problem (14)-(15), can be written in the following form

$$\text{minimize} \qquad I(\mu) = \int_\Omega d\mu \equiv \mu(1) \tag{16}$$

subject to :

$$\begin{cases} \mu(\varphi_n) = a_n, \ n = 1, 2, \ldots, \\ \mu(1) \leq T, \\ \mu(\theta) = \alpha_\theta, \ \theta \in C(\Omega) \text{ independent of } u. \end{cases} \tag{17}$$

The minimizing problem of (16)-(17) is an infinite-dimensional LP problem and we are mainly interested in approximating it. It is possible to approximate the nearly piecewise constant optimal control function of the problem (16)-(17) by the solution of a finite dimensional LP of sufficiently large dimension.

First we consider the minimization of (16) not only over the set Q, but also over a subset of it defined by requiring that only a finite number of constraints (17) be satisfied. This will be achieved by choosing countable sets of functions whose linear combinations are dense in the appropriate spaces, and then selecting a finite number of them.

Proposition 5.1 *Let $Q(M_1, M_2)$ be a subset of $M^+(\Omega)$ consisting of all measures which satisfy*

$$\begin{cases} \mu(\varphi_n) = a_n, \ n = 1, 2, \ldots, M_1 \\ \mu(1) \leq T, \\ \mu(\theta_k) = \alpha_{\theta_k}, \quad k = 1, 2, \ldots, M_2. \end{cases}$$

As M_1 and M_2 tend to infinity, $T(M_1, M_2) = \inf_{Q(M_1,M_2)} \mu(1)$ tends to $T = \inf_Q \mu(1)$.

Proof. The proof is similar to Proposition 2 in [8]. □

This is the first stage of the approximation. As the second stage, from the Theorem $(A.5)$ of [19], we can characterize a measure, say μ^*, in the set $Q(M_1, M_2)$ at which the function $\mu \to \mu(1)$ attains its minimum. Proposition 5.2 follows from a result of Rosenbloom [18].

Proposition 5.2 *The measure μ^* in the set $Q(M_1, M_2)$ at which the function $\mu \to \mu(1)$ attains its minimum has the following form*

$$\mu^* = \sum_{j=1}^{M_1+M_2} \beta_j^* \delta(z_j^*) \tag{18}$$

with $z_j^* \in \Omega$ and $\beta_j \geq 0$, j=1,2,$\cdots, M_1 + M_2$. Here $\delta_\Omega(z^*)$ is unitary atomic measure concentrated at $z^* \in \Omega$, characterized by $\delta(z^*)(F) = F(z^*)$, where $F \in C(\Omega)$.

Based on (18), the measure theoretical optimization problem (16)-(17) is equivalent to the following nonlinear optimization problem:

$$\text{minimize} \qquad \sum_{j=1}^{M_1+M_2} \beta_j^* \tag{19}$$

subject to

$$\sum_{j=1}^{M_1+M_2} \beta_j^* \varphi_n(z_j^*) = a_n, \ n = 1, \cdots, M_1, \tag{20}$$

$$\sum_{j=1}^{M_1+M_2} \beta_j^* \theta_k(z_j^*) = \alpha_{\theta_k}, \ k = 1, \cdots, M_2, \tag{21}$$

$$\sum_{j=1}^{M_1+M_2} \beta_j^* \leq T. \tag{22}$$

$$\beta_j^* \geq 0, \ j = 1, 2, \ldots, M_1 + M_2, \tag{23}$$

where the unknowns are the coefficients β_j^*, supports z_j^*, $j = 1, 2, \ldots, N$, and T. It would be computationally convenient if we could minimize the function $\mu \to \mu(1)$ only with respect to the coefficients β_j^*, $j = 1, 2, \ldots, N$, and T, which leads to a finite-dimensional nonlinear programming problem. However, we do not know the supports of the optimal measure. The answer lies in a meaningful approximation of this support, by introducing a dense subset in Ω.

Proposition 5.3 *Let σ be a countable dense subset of Ω. Given $\epsilon > 0$, a measure $\bar{\mu} \in M^+(\Omega)$ can be found such that*

$$|(\mu^* - \bar{\mu})(1)| \leq \epsilon,$$

$$|(\mu^* - \bar{\mu})(\varphi_n)| \leq \epsilon, \ (n = 1, 2, \ldots, M_1),$$

$$|(\mu^* - \bar{\mu})(\theta_k)| \leq \epsilon, \ (k = 1, 2, \ldots, M_2),$$

the measure $\bar{\mu}$ has the form

$$\bar{\mu} = \sum_{j=1}^{M_1+M_2} \beta_j^* \delta(z_j), \tag{24}$$

where the coefficients of β_j^* are the same as in the optimal measure (18) and $z_j \in \sigma$.

Proof. See the proof of Proposition III.3 in [19]. □

Finally, the above results enable us to approximate the problem via the finite dimensional nonlinear programming problem:

$$\text{minimize} \qquad \sum_{j=1}^{N} \beta_j \tag{25}$$

subject to

$$\sum_{j=1}^{N} \beta_j \varphi_n(z_j) = a_n, \ n = 1, \cdots, M_1, \tag{26}$$

$$\sum_{j=1}^{N} \beta_j \theta_k(z_j) = \alpha_{\theta_k}, \ k = 1, \cdots, M_2, \tag{27}$$

$$\sum_{j=1}^{N+1} \beta_j = T. \tag{28}$$

$$\beta_j \geq 0, \ j = 1, 2, \ldots, N+1, \tag{29}$$

where $N >> M_1 + M_2$ and $z_j, \ j = 1, ...N$ are fixed in σ. It is to be noted that we added a slack variable β_{N+1} for obtaining equality in (22). In the problem (25)-(29), Ω is partitioned into N subregions $\Omega_1, \Omega_2, ..., \Omega_N$ where $\Omega = \bigcup_{j=1}^{N} \Omega_j$ and z_j is chosen in Ω_j. To this means, assume that $[0, T]$ is divided to m_1 portion and $U = [-K, K]$ to m_2 portion, that is $N = m_1 m_2$. As the end part of $[0, T]$ is unknown, we divide $[0, T_1]$ into $m_1 - 1$ portion and $[T_1, T]$ is the rest partition. On the other hand, functions $\sin(\lambda_k T)$ and $\cos(\lambda_k T)$ appearing the right-hand side in (26) can be approximated by the Taylor series in a neighborhood of $T - T_1$ as follows:

$$\sin(\lambda_k T) = \sin(\lambda_k (T - T_1 + T_1)) =$$

$$\sin(\lambda_k (T - T_1)) \cos(\lambda_k T_1) + \cos(\lambda_k (T - T_1)) \sin(\lambda_k T_1) =$$

$$\left(\lambda_k (T - T_1) + O\left(T - T_1\right)^3\right) \cos(\lambda_k T_1) + \cos(\lambda_k (T - T_1)) \sin(\lambda_k T_1),$$

and

$$\cos(\lambda_k T) = \cos(\lambda_k (T - T_1 + T_1)) =$$

$$\left(1 + O(T - T_1)^2\right) \cos(\lambda_k T_1) - \sin(\lambda_k (T - T_1)) \sin(\lambda_k T_1),$$

where $|T - T_1| \approx 0$. Then

$$\sin(\lambda_k T) \approx \lambda_k (T - T_1)\cos(\lambda_k T_1) + \sin(\lambda_k T_1),$$
$$\cos(\lambda_k T) \approx \cos(\lambda_k T_1) - \lambda_k (T - T_1)\sin(\lambda_k T_1).$$

In application, the functions θ_k in (27) are chosen as piecewise constant. Let us define

$$\theta_k(t,u) = \begin{cases} 1 & \text{if } t \in J_k, \\ 0 & \text{otherwise,} \end{cases} \tag{30}$$

where

$$J_k = [\frac{(k-1)T_1}{m_1 - 1}, \frac{kT_1}{m_1 - 1}], \quad k = 1, 2, \ldots, m_1 - 1,$$
$$J_{m_1} = [T_1, T].$$

In the right-hand side of (27), α_{θ_k} is the integral of $\theta_k(t,u)$ on $[0,T]$; so by (30) we have

$$\alpha_{\theta_k} = \begin{cases} \frac{T_1}{m_1 - 1} & s = 1, ..., m_1 - 1, \\ T - T_1 & s = m_1. \end{cases}$$

From the above relations and expanding (27), we have

$$\begin{aligned} \sum_{j=1}^{m_2} \beta_j &= \frac{T_1}{m_1 - 1}, \\ \sum_{j=m_2+1}^{2m_2} \beta_j &= \frac{T_1}{m_1 - 1}, \\ &\vdots \\ \sum_{j=(m_1-2)m_2+1}^{(m_1-1)m_2} \beta_j &= \frac{T_1}{m_1 - 1}, \\ \sum_{j=(m_1-1)m_2+1}^{m_1 m_2} \beta_j &= T - T_1. \end{aligned}$$

Adding the above equalities leads to

$$\sum_{j=1}^{N} \beta_j = T. \tag{31}$$

Comparing (28) and (31) guarantees that $\beta_{N+1} = 0$.

From the above analysis, the nonlinear programming problem (25)-(29) can be converted

to the following LP problem

$$\begin{cases} \text{minimize} & \sum_{j=1}^{N} \beta_j \\ \text{subject to} & \\ \sum_{j=0}^{N} \beta_j \sin(\lambda_k t_j) u_j - \frac{\lambda_k}{b_k} \left(\lambda_k F_k \sin(\lambda_k T_1) + G_k \cos(\lambda_k T_1)\right) T = & \\ \frac{1}{b_k} \left(-\lambda_k [F_k + T_1 G_k] \cos(\lambda_k T_1) + [G_k - \lambda_k^2 T_1 F_k] \sin(\lambda_k T_1) + \lambda_k Q_{0k}\right) & \\ k = 1, \cdots, \frac{M_1}{2}, & \\ \\ \sum_{j=0}^{N} \beta_j \cos(\lambda_k t_j) u_j - \frac{\lambda_k}{b_k} \left(\lambda_k F_k \cos(\lambda_k T_1) - G_k \sin(\lambda_k T_1)\right) T = & \\ \frac{1}{b_k} \left(\lambda_k [F_k + T_1 G_k] \sin(\lambda_k T_1) + [G_k - \lambda_k^2 T_1 F_k] \cos(\lambda_k T_1) - Q_{1k}\right) & \\ k = 1, \cdots, \frac{M_1}{2}, & \\ \\ \sum_{j=(i-1)m_2+1}^{im_2} \beta_j = \frac{T_1}{m_1 - 1}, & i = 1, 2, \cdots, m_1 - 1, \\ \\ \sum_{j=(m_1-1)m_2+1}^{N} \beta_j - T = -T_1, & \\ T > 0, \beta_j \geq 0, & j = 1, 2, \cdots, N, \end{cases} \tag{32}$$

where $m_1 = M_2$.

In the next section we show how to construct the piecewise-constant optimal control $u(.)$ and the optimal time T by using the problem (25)-(29).

6. Calculating the approximated optimal pair $(u(.), T)$

In this section, a combined algorithm is derived to find the best lower bound for optimal time T, then a piecewise-constant control related to T is constructed such that the numerical errors

$$\begin{cases} E_1 = \|P(x,T) - F(x)\|_2^2 = \int_0^{L_1} \left(P(x,T) - F(x)\right)^2 dx, \quad x \in \omega, \\ E_2 = \|P_t(x,T) - G(x)\|_2^2 = \int_0^{L_1} \left(P_t(x,T) - G(x)\right)^2 dx, \quad x \in \omega, \end{cases} \tag{33}$$

tend to zero.

To solve the problem of choosing the lower bound T_1 in LP (32), we use a search algorithm which is an iterative method to find the best choice for this lower bound and is proposed in [13]. In this algorithm we follow a routine golden section method [10], where the function evaluation $T_1 \to T(T_1)$ is done.

Algorithm 6.1

First let $I = [T_1, T_2]$ where $T_1 = 0$ and T_2 is an upper bound for T. Choose a penalty $M >> T_2$.

Step 1: Let $T^1 = T_1 + 0.382(T_2 - T_1)$ and $T^2 = T_1 + 0.618(T_2 - T_1)$ and solve the corresponding LP to find $T(T^1)$ and $T(T^2)$. The penalty M is assigned to $T(T^1)$ or $T(T^2)$ if no feasible solution there exists for the corresponding LP problem.

Step 2: If $T(T^1) > T(T^2)$; then set $T_1 = T^1$ and $T_2 = T_2$; else if $T(T^1) < T(T^2)$ set $T_1 = T_1$ and $T_2 = T^2$.

Step 3: If the length of the interval $I = [T_1, T_2]$ is small enough, then stop with $\frac{T_1+T_2}{2}$ as the minimum value for T_1; else go to Step 1.

Now we explain construction of a nearly optimal control from the LP solution. By using of a manner which is given in [13], a piecewise-constant optimal control function can be constructed by considering

$$t_k = \sum_{j \le k} \beta_j,$$

such that

$$u(t) \approx u_k, \quad t \in I_k = [t_{k-1}, t_k), \tag{34}$$

where $[0, T] = \bigcup_{k=1}^{M_1+M_2} I_k$. It is clear that the optimal control $u(.)$ in (34) can be written as

$$u(t) = \sum_{j=1}^{M_1+M_2} u_j \chi_{I_j}(t),$$

where χ_{I_j} is the characteristic function of the set I_j. Thus the solution of the problem (1)-(4) in the final minimum time T can be written in the following form:

$$\begin{aligned}
&P(x,T)\\
&= \sum_{n=1}^{\infty} \left(Q_{0n} \cos(\lambda_n t) + \frac{1}{\lambda_n} Q_{1n} \sin(\lambda_n t) + \frac{b_n}{\lambda_n} \int_0^T \sin(\lambda_n (t-\tau)) u(\tau) d\tau \right) e_n(x)\\
&= \sum_{n=1}^{\infty} \left(Q_{0n} \cos(\lambda_n T) + \frac{1}{\lambda_n} Q_{1n} \sin(\lambda_n T) + \frac{b_n}{\lambda_n} \int_0^T \sin(\lambda_n (T-\tau)) \sum_{j=1}^{M_1+M_2} u_j \chi_{I_j}(\tau) d\tau \right) e_n(x)\\
&= \sum_{n=1}^{\infty} \left(Q_{0n} \cos(\lambda_n T) + \frac{1}{\lambda_n} Q_{1n} \sin(\lambda_n T) + \frac{b_n}{\lambda_n} \sum_{j=1}^{M_1+M_2} u_j \int_{\tau_{j-1}}^{\tau_j} \sin(\lambda_n (T-\tau)) d\tau \right) e_n(x)\\
&= \sum_{n=1}^{\infty} \left(Q_{0n} \cos(\lambda_n T) + \frac{1}{\lambda_n} Q_{1n} \sin(\lambda_n T) + \frac{b_n}{\lambda_n^2} \sum_{j=1}^{M_1+M_2} u_j \cos(\lambda_n (T-\tau_j)) - \cos(\lambda_n (T-\tau_{j-1})) \right) e_n(x).
\end{aligned}$$

Furthermore

$$\begin{aligned}
&P_t(x,T)\\
&= \sum_{n=1}^{\infty} \left(-\lambda_n Q_{0n} \sin(\lambda_n T) + Q_{1n} \cos(\lambda_n T) + b_n \int_0^T \cos(\lambda_n (T-t)) u(t) dt \right) e_n(x)\\
&= \sum_{n=1}^{\infty} \left(-\lambda_n Q_{0n} \sin(\lambda_n T) + Q_{1n} \cos(\lambda_n T) + b_n \int_0^T \cos(\lambda_n (T-\tau)) \sum_{j=1}^{M_1+M_2} u_j \chi_{I_j}(\tau) d\tau \right) e_n(x)\\
&= \sum_{n=1}^{\infty} \left(-\lambda_n Q_{0n} \sin(\lambda_n T) + Q_{1n} \cos(\lambda_n T) + b_n \sum_{j=1}^{M_1+M_2} u_j \int_{\tau_{j-1}}^{\tau_j} \cos(\lambda_n (T-\tau)) d\tau \right) e_n(x)\\
&= \sum_{n=1}^{\infty} \left(-\lambda_n Q_{0n} \sin(\lambda_n T) + Q_{1n} \cos(\lambda_n T) - \frac{b_n}{\lambda_n} \sum_{j=1}^{M_1+M_2} u_j (\sin(\lambda_n (T-\tau_j)) - \sin(\lambda_n (T-\tau_{j-1})) \right) e_n(x).
\end{aligned}$$

7. Time optimal control problem of the two-dimensional wave equation

In this section we consider the following control problem:

$$P_{tt}(x,y,t) = c^2(P_{xx}(x,y,t) + P_{yy}(x,y,t)) + u(t)b(x,y), \ (x,y,t) \in \omega \times [0,T], \tag{35}$$

$$P(x,y,0) = Q_0(x,y), \qquad (x,y) \in \omega, \tag{36}$$

$$P_t(x,y,0) = Q_1(x,y), \qquad (x,y) \in \omega, \tag{37}$$

$$P(x,y,t) = 0, \qquad (x,y,t) \in \partial\omega \times [0,T], \tag{38}$$

where $\omega = (0, L_1) \times (0, L_2)$, is a bounded open subset of Eucleadian space $I\!R^2$ with boundary $\partial\omega$. Minimum time control problem is to find a control function $u(t) \in [-K, K]$, almost everywhere for $t \in [0,T]$ and some suitable $K > 0$, such that puts the system (35)-(38) in minimum time T into a stationary regime, i.e.

$$P(x,y,T) = F(x,y), \quad (x,y) \in \omega, \tag{39}$$

$$P_t(x,y,T) = G(x,y), \quad (x,y) \in \omega, \tag{40}$$

where the functions $b(x,y)$, $Q_0(x,y), Q_1(x,y), F(x,y)$ and $G(x,y)$ are known in $L_2(\omega)$.

Let assume $\{e_{mn}(x,y) = \sin(\frac{m\pi x}{L})\sin(\frac{n\pi y}{H}),\ m,n = 1,2,\cdots\}$ be a sequence of normalized eigenfunctions corresponding to the sequence of eigenvalues $\{\lambda_{mn} = c[(\frac{m\pi}{L})^2 + (\frac{n\pi}{H})^2]^{\frac{1}{2}},\ m,n = 1,2,\cdots\}$. Moreover, let the expansion of the functions $b(\cdot,\cdot)$, $Q_0(\cdot,\cdot)$, $Q_1(\cdot,\cdot)$, $F(\cdot,\cdot)$ and $G(\cdot,\cdot)$ in terms of eigenfunctions be:

$$\begin{cases} b(x,y) = \sum_{m=1}^{\infty}\sum_{n=1}^{\infty} b_{mn}e_{mn}(x,y), \\ Q_0(x,y) = \sum_{m=1}^{\infty}\sum_{n=1}^{\infty} Q_{0mn}e_{mn}(x,y), \quad Q_1(x,y) = \sum_{m=1}^{\infty}\sum_{n=1}^{\infty} Q_{1mn}e_{mn}(x,y), \\ F(x,y) = \sum_{m=1}^{\infty}\sum_{n=1}^{\infty} F_{mn}e_{mn}(x,y), \quad G(x,y) = \sum_{m=1}^{\infty}\sum_{n=1}^{\infty} G_{mn}e_{mn}(x,y). \end{cases}$$

$$\begin{bmatrix} P(x,y,t) \\ \\ P_t(x,y,t) \end{bmatrix} = \begin{bmatrix} \sum_{m=1}^{\infty}\sum_{n=1}^{\infty}[Q_{0mn}\cos(\lambda_{mn}t) + \frac{1}{\lambda_{mn}}Q_{1mn}\sin(\lambda_{mn}t) \\ \\ +\frac{b_{mn}}{\lambda_{mn}}\int_0^t \sin(\lambda_{mn}(t-\tau))u(\tau)d\tau]e_{mn} \\ \\ \sum_{m=1}^{\infty}\sum_{n=1}^{\infty}[-\lambda_{mn}Q_{0mn}\sin(\lambda_{mn}t) + Q_{1mn}\cos(\lambda_{mn}t) \\ \\ +b_{mn}\int_0^t \cos(\lambda_{mn}(t-\tau))u(\tau)d\tau]e_{mn} \end{bmatrix}.$$

Similarly the one dimensional case, the problem is transformed to find an optimal pair $(u(\cdot), T)$ satisfying:

$$\begin{cases} \int_0^T \sin(\lambda_{mn}(T-\tau))u(\tau)d\tau = \frac{\lambda_{mn}}{b_{mn}}[F_{mn} - Q_{0mn}\cos(\lambda_{mn}T) - \frac{1}{\lambda_{mn}}Q_{1mn}\sin(\lambda_{mn}T)], \\ \int_0^T \cos(\lambda_{mn}(T-\tau))u(\tau)d\tau = \frac{1}{b_{mn}}[G_{mn} + \lambda_{mn}Q_{0mn}\sin(\lambda_{mn}T) - Q_{1mn}\cos(\lambda_{mn}T)], m, n = \quad 1, 2, \cdots, \end{cases}$$

and the numerical errors

$$\begin{cases} E_3 = \|P(x,y,T) - F(x,y)\|_2^2 = \int_0^{L_1}\int_0^{L_2} \left(P(x,y,T) - F(x,y)\right)^2 dxdy, \quad (x,y) \in \omega, \\ E_4 = \|P_t(x,y,T) - G(x,y)\|_2^2 = \int_0^{L_1}\int_0^{L_2} \left(P_t(x,y,T) - G(x,y)\right)^2 dxdy, \quad (x,y) \in \omega, \end{cases}$$

tend to zero.

8. Simulation results

Example 8.1. Consider the wave equation with an internal control

$$\begin{aligned} &P_{tt}(x,t) = P_{xx}(x,t) + 8xu(t), && (x,t) \in (0,1) \times [0,T], \\ &P(x,0) = x - x^3, && x \in (0,1), \\ &P_t(x,0) = 0, && x \in (0,1), \\ &P(0,t) = P(1,t) = 0, && t \in [0,T], \\ &P(x,T) = 0, && x \in (0,1), \\ &P_t(x,T) = 0, && x \in (0,1). \end{aligned}$$

We choose $M_1 = 10, M_2 = 20$, $m_1 = m_2 = 20$ and $K = 1$. Thus $\Omega = [0,T] \times [-1,1]$ is divided to $N = 400$ equal subintervals. We select $z_p = (t_p, u_p), p = 1, 2, ..., 400$, as

$$p = i + m_2(k-1), \quad (i, k = 1, 2, \cdots, 20) \begin{cases} t_p &= \frac{T_1}{19}(k-1) + 0.05, \\ u_p &= -1 + 0.1(20 - i). \end{cases}$$

We solve the problem (32) by Algorithm 6.1 with $T_2 = 15$ as initial upper bound. The best lower bound is found $T_1 = 1.382$ and the nearly optimal time is $T = 1.4749$. The optimal control function is represented in Figure 1.

We attain

$$\begin{aligned} P(x, 1.4749) = \quad & -0.0007\sin(\pi x) + 0.0008\sin(2\pi x) - 0.0001\sin(3\pi x) + \\ & 0.0002\sin(4\pi x) + 0.0001\sin(5\pi x), \\ P_t(x, 1.4749) = \quad & -0.0055\sin(\pi x) - 0.0027\sin(2\pi x) + 0.0017\sin(3\pi x) \\ & -0.0002\sin(4\pi x) + +0.0021\sin(5\pi x). \end{aligned}$$

The corresponding error functions are also given $E_1 = \|P(x, 1.4749) - F(x)\|_2^2 = 5.7978 \times 10^{-7}$ and $E_2 = \|P_t(x, 1.4749) - G(x)\|_2^2 = 2.2585 \times 10^{-5}$. The diagram of the actual

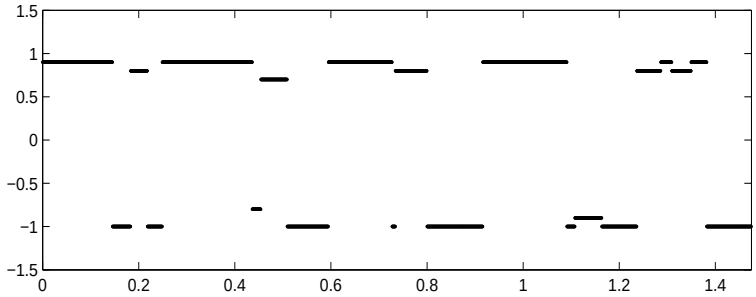

Figure 1: The piecewise-constant optimal control on $t \in [0, 1.4749]$.

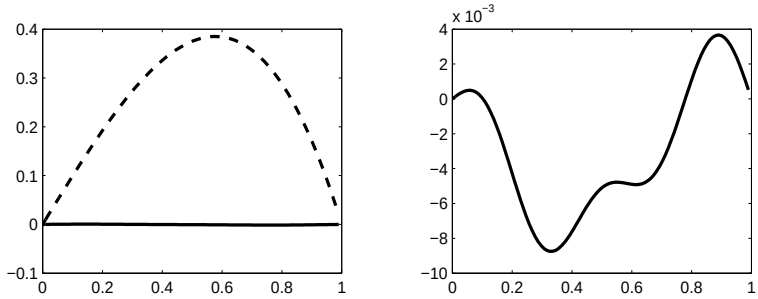

(a) (b)

Figure 2: (a) The broken line represents the initial state $Q_0(x) = x - x^3$, and the solid line represents the desired final state $P(x, 1.4749)$. (b) The desired final velocity $P_t(x, 1.4749)$.

initial state $Q_0(x)$ and the approximating final state $P(x, 1.4749)$ and the final velocity $P_t(x, 1.4749)$ are shown in Figure 2, respectively.

Example 8.2. Let in the problem (1)-(6), $c = 1$, $\omega = (0, \pi)$, $Q_0(x) = 0$, $Q_1(x) = 0$, $b(x) = \pi - x$, $F(x) = 1.5e_1(x)$, $G(x) = 1.6e_1(x)$, where $e_n(x) = \sin(nx)$, $\quad n = 1, 2, \cdots$, and $\lambda_n = n$. In LP problem (32), we choose $M_1 = 2$, $M_2 = 20$, $K = 2$ and $N = 400$. Implementing the corresponding LP model, the best lower bound and the optimal capture time have been found $(T_1, T) = (0.9, 0.9691)$. We have

$$P(x, 0.9691) = 1.5461 \sin(x), \ E_1 = 0.0033,$$
$$P_t(x, 0.9691) = 1.5657 \sin(x), \ E_2 = 0.0018.$$

The graph of control function $u(.)$ is shown in Figures 3. The functions $P(x, 0.9691)$, $F(x)$, $P_t(x, 0.9691)$ and $G(x)$ are also shown in Figure 4.

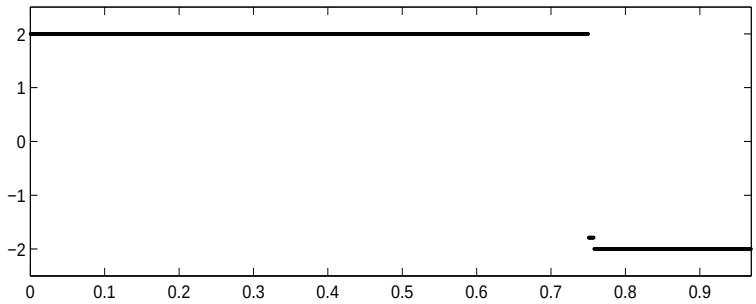

Figure 3: The piecewise-constant optimal control on $t \in [0, 0.9691]$.

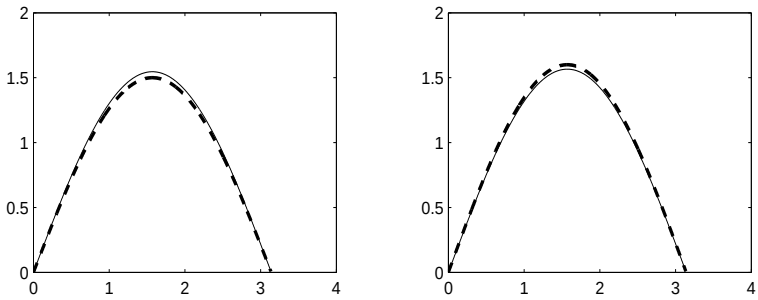

(a) (b)

Figure 4: (a) The solid line represents the desired final state $P(x, 0.9691)$, and the broken line represents the actual final state $F(x)$. (b) The solid line represents the desired final velocity $P_t(x, 0.9691)$, and the broken line represents the actual final velocity $G(x)$.

Example 8.3. Consider the two-dimensional inhomogeneous wave equation

$$\begin{aligned}
&P_{tt}(x,y,t) = P_{xx}(x,y,t) + P_{yy}(x,y,t) + \sqrt{2}xyu(t), && (x,y,t) \in \omega \times [0,T],\\
&P(x,y,0) = 0.2\sin(x)\sin(y), && (x,y) \in \omega = (0,\pi) \times (0,\pi),\\
&P_t(x,y,0) = 0, && (x,y) \in \omega,\\
&P(x,y,t) = 0, && (x,y,t) \in \partial\omega \times [0,T],\\
&P(x,y,T) = P_t(x,y,T) = 0, && (x,y) \in \omega.
\end{aligned}$$

In this example, we choose $M_1 = 4, M_2 = 20$, $m_1 = m_2 = 20$ and $K = 1$. So $\Omega = [0,T] \times [-1,1]$ is divided to $N = 400$ equal subintervals. We select $z_p = (t_p, u_p), p = 1, 2, ..., 400$, as

$$p = i + m_2(k-1), \quad (i,k = 1,2,\cdots,20) \begin{cases} t_p &= \frac{T_1}{19}(k-1) + 0.05,\\ u_p &= -1 + \frac{2}{19}(20-i). \end{cases}$$

$T_1 = 1.2324$ is found as the best lower bound and $T = 1.2867$ as the optimal capture time.

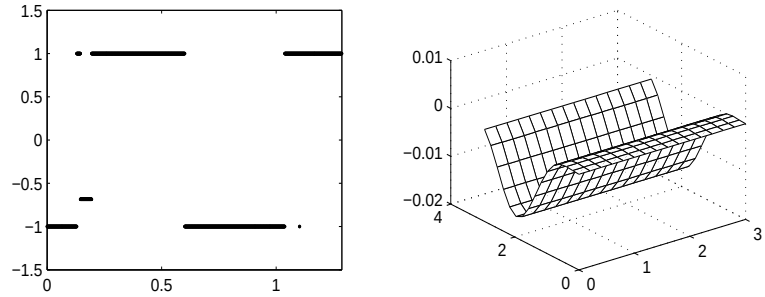

(a) (b)

Figure 5: (a) The piecewise-constant optimal control on $t \in [0, 1.2867]$. (b) The desired final velocity $P_t(x, y, 1.2867)$.

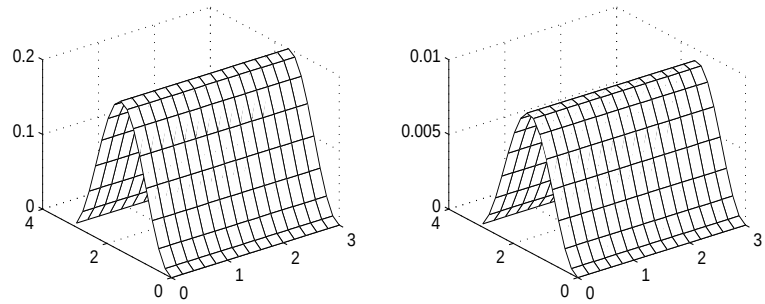

(a) (b)

Figure 6: (a) The initial state $Q_0(x, y)$; (b) the desired final state $P(x, y, 1.2867)$.

We get

$$P(x, y, 1.2867) = 0.0092 \sin(x) \sin(y) + 0.0005 \sin(x) \sin(2y),$$
$$P_t(x, y, 1.2867) = -0.0126 \sin(x) \sin(y) + 0.0077 \sin(x) \sin(2y).$$

The error functions are achieved $E_3 = 2.0971 \times 10^{-4}$ and $E_4 = 5.4149 \times 10^{-4}$. The optimal control function and the approximating final velocity $P_t(x, y, 1.2867)$ are shown in Figure 5. The initial state $Q_0(x, y) = 0.2 \sin(x) \sin(y)$ and the final state $P(x, y, 1.2867)$ are also represented in Figure 6.

Example 8.4. Let in the problem (35)-(40), $c = 1$, $\omega = (0, \pi) \times (0, \pi)$, $Q_0(x, y) = 0$, $Q_1(x, y) = 0$, $F(x, y) = 1.5e_{11}(x, y)$, $G(x, y) = 3.2e_{11}(x, y)$, $b(x, y) = 2xy$, $\lambda_{mn} = \sqrt{m^2 + n^2}$ $m, n = 1, 2, \cdots$ and $e_{mn}(x, y) = \sin(mx) \sin(ny)$. We choose $M_1 = 2$, $M_2 = 20$, $K = 2$, $N = 400$.

Performing the corresponding LP model, the optimal time is realized $T = 0.5025$. We

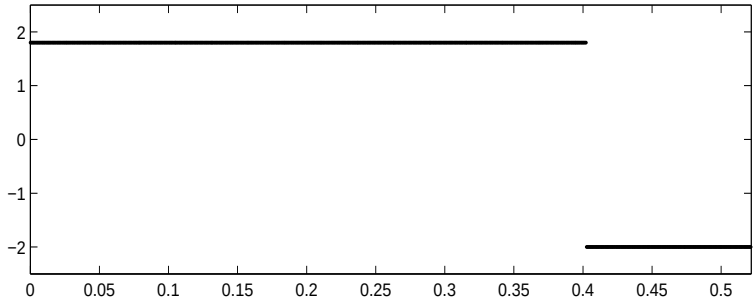

Figure 7: The piecewise-constant optimal control on $t \in [0, 0.5025]$.

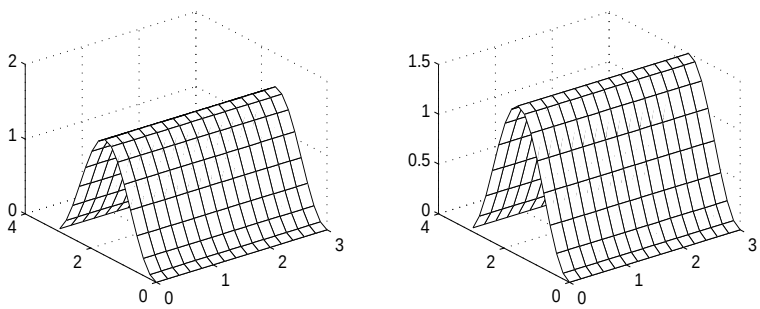

(a) (b)

Figure 8: (a) The desired final state $P(x, y, 0.5025)$. (b) The actual final state $F(x, y)$.

attain

$$P(x, y, 0.5025) = 1.5527 \sin(x) \sin(y), \;\; E_3 = 0.0068,$$
$$P_t(x, y, 0.5025) = 3.2532 \sin(x) \sin(y), \;\; E_4 = 0.007.$$

The optimal control function $u(\cdot)$, $P(x, y, 0.5025)$, $F(x, y)$, $P_t(x, y, 0.5025)$ and $G(x, y)$ are shown in Figures 7-9, respectively.

9. Conclusion

A numerical method for solving minimum-time optimal control problem of the inhomogeneous wave equation has been presented. The used approach in this problem is based on some principles of measure theory, functional analysis and linear programming. In comparison to the other methods, our approach has some facilities. For example, this method is not iterative and it is self-starting. Furthermore, in this approach, the nonlinearity of the constraints and objective function has not serious effects on the solution.

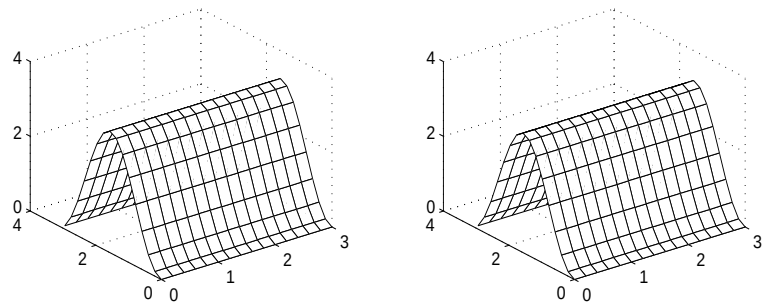

(a) (b)

Figure 9: (a) The desired final velocity $P_t(x, y, 0.5025)$; (b) the actual final velocity $G(x, y)$.

References

[1] S. P. Banks, *State-space and frequency-domain methods in the control of distributed parameter systems,* Peter Peregrinus Ltd, (1983).

[2] N. Basile and M. Mininni, *An extension of the maximum principle for a class of optimal control problems in infinite-dimensional spaces,* SIAM J. Control Optim. **28**: (1990) 1113-1135.

[3] J. C. Bruch Jr., J.M. Sloss, S.A. Adali and I.S. Sadek, *Orthotropic plates with shear rotation subject to optimal open-closed loop controls,* J. Astronaut. Sci. **38**: (1990) 105-119.

[4] J. C. Bruch Jr., S. Adali, J. M. Sloss and I.S. Sadek, *Maximum principle for the optimal control of a hyperbolic equation in one space dimension,* Part 2: application, J. Optim. Theory Appl. **87**: (1995) 287-300.

[5] J. C. Bruch Jr., I. S. Sadekc, S. Adalid and J. M. Slossb, *A maximum principle approach to optimal control for one-dimensional hyperbolic systems with several state variables* J. of the Frank. Inst. **343**: (2006) 480–494.

[6] M. H. Farahi, J. E. Rubio and D. A. Wilson, *The optimal control of the linear wave equation* Int. J. Contr. **63**: (1996) 833-848.

[7] M. H. Farahi, H. H. Mehne and A. H. Borzabadi, *Wing drag minimization by using measure theory,* J. Optim. Meth. Soft. **21**: (2006) 169-177.

[8] M. H. Farahi, A. H. Borzabadi, H. H. Mehne, and A. V. Kamyad, *Measure theoretical approach for optimal shape design of a nozzle,* J. Appl. Math. Comput. **17**: (2005) 315-328.

[9] H. O. Fattorini, *Optimal control problems for distributed parameter systems in banach spaces,* Appl. Math. Optim. **28**: (1993) 225-257.

[10] R. Fletcher, Practical Methods of Optimization, Wiley: New York, (2000).

[11] A. Ghouila-houri, *Sur la Generalization de la Notion de Commande d'un System Guidabie,* Revue Francaise d'Automatique et Recherche Operationelle, **1**: (1967) 7–32.

[12] H. H. Mehne, *On solving constrained shape optimization problems for finding the optimum shape of a bar cross-section,* J. Appl. Numer. Math. **58**: (2008) 1129–1141.

[13] H. H. Mehne, M. H. Farahi, A. V. Kamyad, *MILP modelling for the time optimal control problem in the case of multiple targets,* Optim. Contr. Appl. Meth. **27**: (2006) 77-91.

[14] A. R. Nazemi, M. H. Farahi and M. Zamirian, *Filtration problem in inhomogeneous dam by using embedding method,* J. Appl. Math. Comput., **28** (2008); 313-332.

[15] A. R. Nazemi, M. H. Farahi and H. H. Mehne, *Optimal shape design of iron pole section of electromagnet,* J. Phys. Lett. A **372**: (2008) 3440-3451.

[16] A. R. Nazemi and M. H. Farahi *Control the fibre orientation distribution at the outlet of contraction,* J. Acta Appl. Math. **106**: (2009) 279-292.

[17] X. Pan and C.H. Hansen, *Effect of end conditions on the active control of beam vibration,* J. Sound Vib. **168**: (1993) 429448.

[18] P. C. Rosenbloom, *Quelques classes de problems extremaux.* Bulletin de la Société Mathématique de France, **80**: (1952) 183–216.

[19] J. E. Rubio, *Control and optimization; the Linear Treatment of Non-linear Problems* Manchester, U. K., Manchester University Press, (1986).

[20] W. Rudin, *Functional analysis,* second ed., McGraw-Hill, New York, (1991).

[21] P. K. C. Wang, *Feedback control of vibrations in an extendible wing, Dynamic Stability of Systems,* **3**: (1988) 109133.